Find a Retailer Need Help?

sparkfun START SOMETHING

SHOP LEARN BLOG CUSTOM KITS LOG IN REGISTER

PRODUCT MENU find products, tutorials, etc... TODAY'S DEALS FORUM

Getting Started with Load Cells

CONTRIBUTORS: SARAH AL-MUTLAQ

FAVORITE 28

Introduction

Have you ever wanted to know the weight of something? How about knowing the change in weight over time? Do you want your project to sense the presence of something by measuring strain or a load on some surface? If so, you're in the right place. This tutorial is here to help you get started in the world of load cells and their variants.

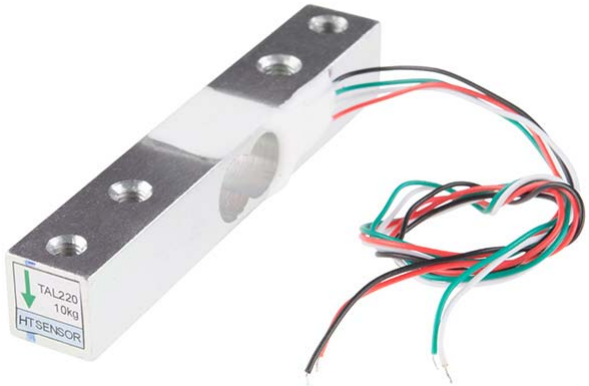

One of many kinds of load cells.

Suggested readings:

Before jumping into load cells and all of their awesomeness, we suggest you familiarize yourself with some basic concepts if you haven't already:

Voltage, Current, Resistance, and Ohm's Law

Learn about Ohm's Law, one of the most fundamental equations in all electrical engineering.

Voltage Dividers

Turn a large voltage into a smaller one with voltage dividers. This tutorial covers: what a voltage divider circuit looks like and how it is used in the real world.

Resistors

A tutorial on all things resistors. What is a resistor, how do they behave in parallel/series, decoding the resistor color codes, and resistor applications.

Series and Parallel Circuits

An introduction into series and parallel circuits.

How to Read a Schematic

An overview of component circuit symbols, and tips and tricks for better schematic reading. Click here, and become schematic-literate today!

Load Cell Basics

Types of Load Cells

A load cell is a physical element (or transducer if you want to be technical) that can translate pressure (force) into an electrical signal.

So what does that mean? There are three main ways a load cell can translate an applied force into a measurable reading.

Hydraulic Load Cells

Hydraulic load cells use a conventional piston and cylinder arrangement to convey a change in pressure by the movement of the piston and a diaphragm arrangement which produces a change in the pressure on a Bourdon tube connected with the load cells.

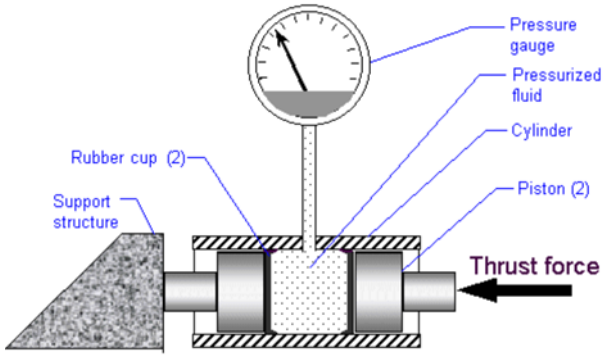

Diagram of a Hydraulic Load Cell from Nikka's Rocketry

Pneumatic Load Cells

Pneumatic load cells use air pressure applied to one end of a diaphragm, and it escapes through the nozzle placed at the bottom of the load cell, which has a pressure gauge inside of the cell.

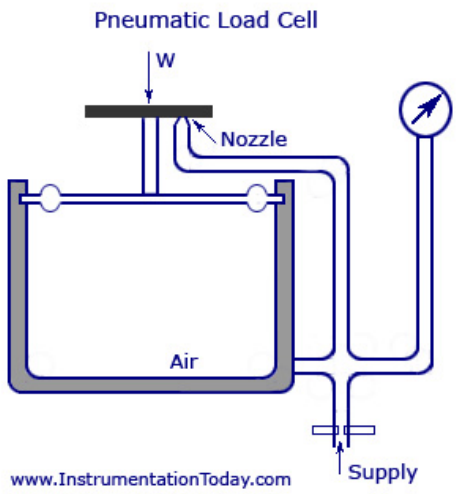

Diagram of a pneumatic load cell from Instrumentation Today

Strain Gauge Load Cells

And lastly (though there are many other less common load cell set ups), there is a strain gauge load cell, which is a mechanical element of which the force is being sensed by the deformation of a (or several) strain gauge(s)

on the element.

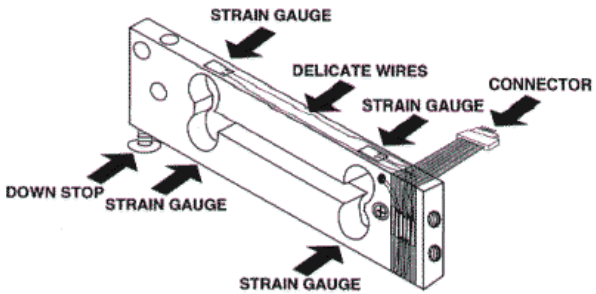

Strain gauge load cell diagram from Scalenet.com

In bar strain gauge load cells, the cell is set up in a "Z" formations so that torque is applied to the bar and the four strain gauges on the cell will measure the bending distortion, two measuring compression and two tension. When these four strain gauges are set up in a wheatstone bridge formation, it is easy to accurately measure the small changes in resistance from the strain gauges.

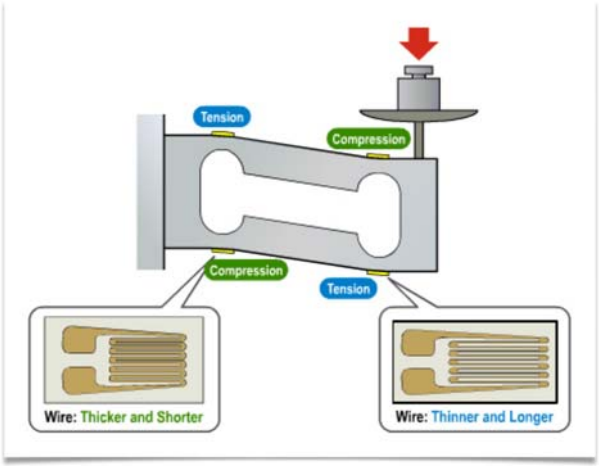

More in depth diagram of strain gauges on bar load cells when force is applied

In this tutorial, we will be focusing on strain gauge load cells like the ones SparkFun carries:

Load Cell - 5kg, Straight Bar (TAL220B)

SEN-14729

$11.95

★★★★★ 1

Mini Load Cell - 100g, Straight Bar (TAL221)

SEN-14727

$9.95

★★★★☆ 1

Load Cell - 10kg, Straight Bar (TAL220)

SEN-13329

$9.50

★★★★☆ 3

Mini Load Cell - 500g, Straight Bar (TAL221)

SEN-14728

$10.95

Load Cell - 50kg, Disc (TAS606)

SEN-13331

$64.50

★★★☆☆ 2

Load Cell - 200kg, Disc (TAS606)

SEN-13332

$64.50

★★★★½ 4

Load Cell - 200kg, S-Type (TAS501)

SEN-14282

$64.50

★★★★½ 3

Load Cell - 10kg, Straight Bar with Hook

SEN-21669

$12.95

Most strain gauge load cells work in very similar ways, but may vary in size, material, and mechanical setup, which can lead to each cell having different max loads and sensitivities that they can handle. For a few possible load cell mechanical setups, check out the hookup guide with the load cell setup.

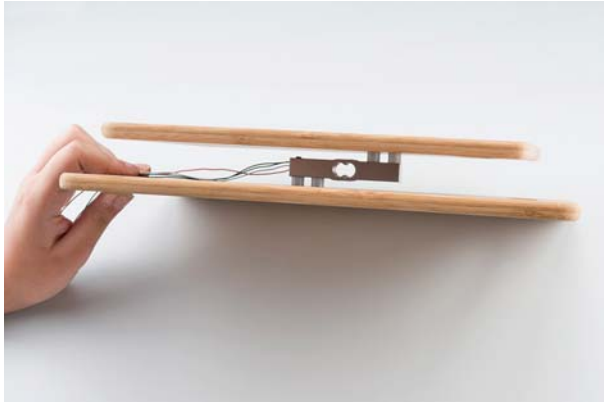

One Possible Load Cell Setup with the Bar-Type Load Cell

Strain Gauge Basics

A strain gauge is a device that measures electrical resistance changes in response to, and proportional of, strain (or pressure or force or whatever you so desire to call it) applied to the device. The most common strain gauge is made up of very fine wire, or foil, set up in a grid pattern in such a way that there is a linear change in electrical resistance when strain is applied in one specific direction, most commonly found with a base resistance of 120Ω, 350Ω, and 1,000Ω.

Gauge Factor

Each strain gauge has a different sensitivity to strain, which is expressed quantitatively as the **gauge factor (GF)**. The gauge factor is defined as the ratio of fractional change in electrical resistance to the fractional change in length (strain). (The gauge factor for metallic strain gauges is typically around 2.)

Small Changes in Strain

We set up a strain gauge load cell and measure that change in resistance and all is good, right? Not so fast. Strain measurements rarely involve quantities larger than a few millistrain $(e \cdot 10^{-3})$ (fancy units for strain, but

still very small).

So lets take an example: suppose you put a strain of 500με. A strain gauge with a gauge factor of 2 will have a change in electrical resistance of only:

$$2 * (500 * 10^{-6}) = 0.1\%$$

For a 120Ω gauge, this is a change of only 0.12Ω. 0.12Ω is a very small change, and, for most devices, couldn't actually be detected, let alone detected accurately. So we are going to need another device that can either accurately measure super small changes in resistance (spoiler: they are very expensive) or a device that can take that very small change in resistance and turn it into something that we can measure accurately.

Amplifiers and Wheatstone Bridge

This is where an amplifier, such as the HX711 or the NAU7802 comes in handy.

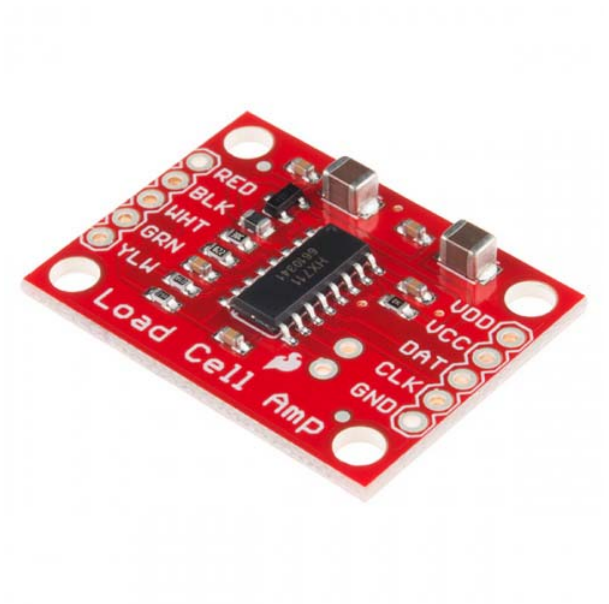

SparkFun Load Cell Amplifier - HX711

SEN-13879

$10.95

44

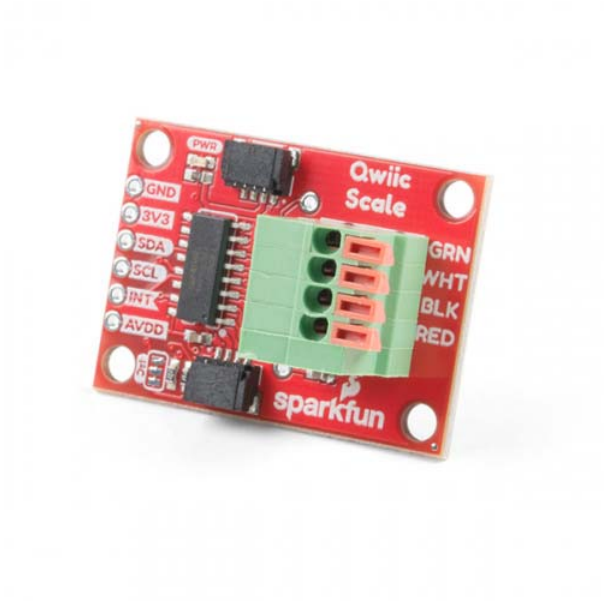

SparkFun Qwiic Scale - NAU7802

SEN-15242

$16.50

10

A good way of taking small changes in resistance and turning it into something more measurable is using a wheatstone bridge. A wheatstone bridge is a configuration of four resistors with a known voltage applied like this:

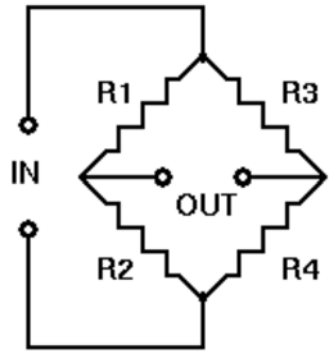

where Vin is a known constant voltage, and the resulting Vout is measured. If $R1/R2 = R3/R4$, then Vout is 0, but if there is a change to the value of one of the resistors, Vout will have a resulting change that can be measured and is governed by the following equation using Ohm's law:

$$V_{out} = [R3/(R3 + R4) - R1/(R1 + R2)] \times V_{in}$$

or

$$V_{out} = [R2/(R1 + R2) - R4/(R3 + R4)] \times V_{in}$$

By replacing one of the resistors in a wheatstone bridge with a strain gauge, we can easily measure the change in Vout and use that to assess the force applied.

Full-bridge strain gauge circuit

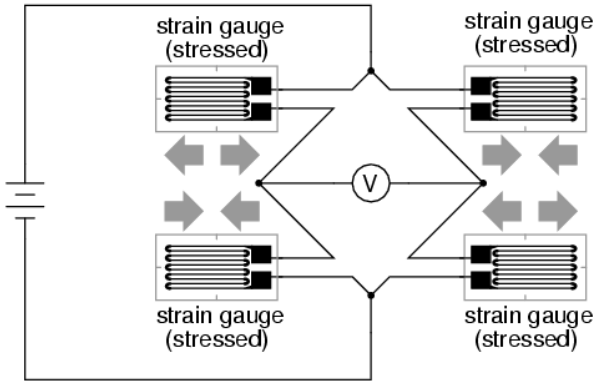

Bar load cell wheatstone bridge example From All About Circuits

Combinator Basics

But what happens when you don't have a load cell with four strain gauges? Or you want to measure something really heavy on something scale like? You can combine four single strain gauge load cells (sometimes referred to as Load sensors) using the load sensor combinator breakout board!

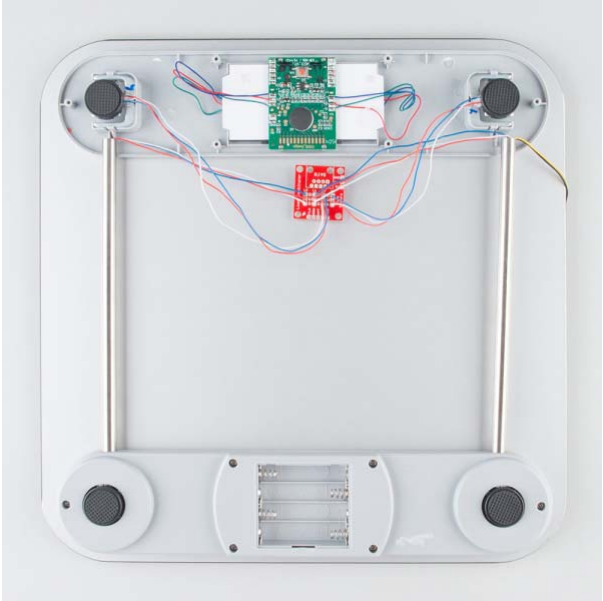

Bathroom scale using the Load Sensor Combinator to combine twelve wires into one wheatstone bridge

Using the same wheatstone bridge principle, you can use the combinator to combine the single strain gauge load cells into a wheatstone bridge configuration where the force applied to all four single strain gauge load cells is added to give you a higher maximum load, and better accuracy than just one. The combinator can be hooked up to the same amplifier for easier measuring.

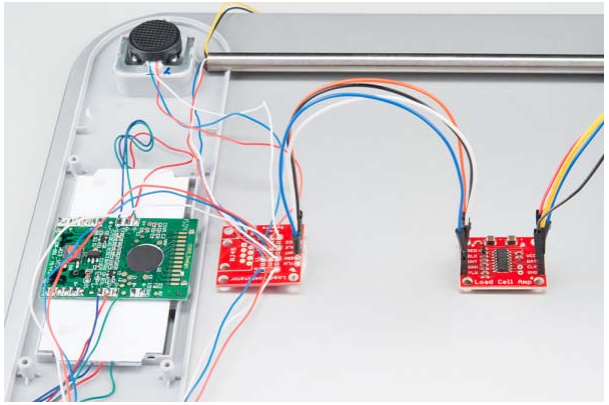

Load cells connected to combinator and HX711 amplifier

This is the same layout that you would find in say your home scale. There would be four single strain gauge load cells hooked up to a combinator and an amplifier to give you your weight reading. For more information about setting up the four single strain gauges with the combinator, check out the combinator's hardware hookup for the HX711. This setup can also be used with the NAU7802.

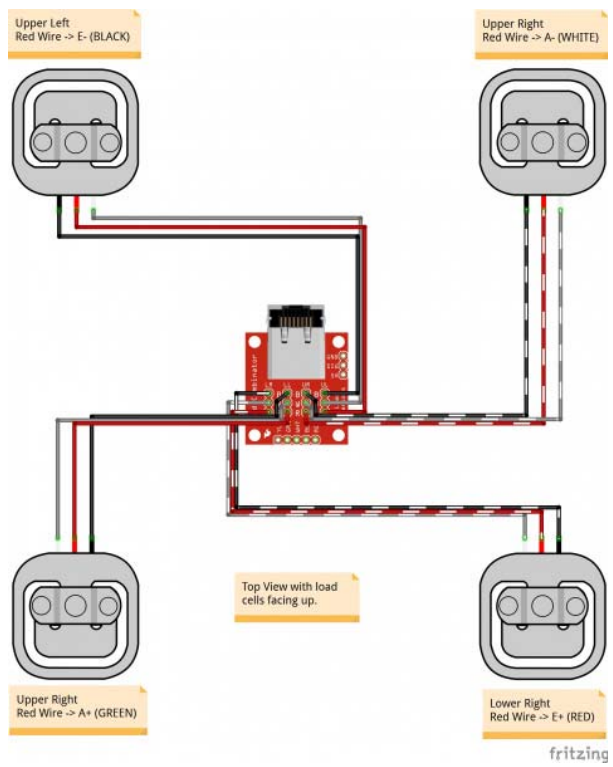

Four Single Strain Gauges Arranged in a Wheatstone Bridge with the Combinator

Resources and Going Further

For more information about the load cells, check out the resources below:

- Datasheet
  - 50kg and 200kg, Disc/Button-Type (TAS606) (JPG)
  - 200kg, S-Type (TAS501) (PDF)
  - 10kg, Straight Bar (TAL220) (PDF)
  - 5kg, Straight Bar (TAL220B) (PDF)
  - Mini Load Cell - 500g, Straight Bar (TAL221) (PDF)
  - Mini Load Cell - 100g, Straight Bar (TAL221) (PDF)

For more information about setting up load cells and how to integrate them

into your next project, check out our HX711 hookup guide:

Load Cell Amplifier HX711 Breakout Hookup Guide

JULY 22, 2016

A hookup guide for the HX711 load cell amplifier breakout board

Qwiic Scale Hookup Guide

APRIL 11, 2019

Create your own digital scale quickly and easily using the Qwiic Scale!

You may also be interested in learning about the OpenScale or connecting a load cell to the cloud with the following tutorials!

OpenScale Applications and Hookup Guide

OpenScale allows you to have a permanent scale for industrial and biological applications. Learn how to use the OpenScale board to read and configure load cells.

IoT Industrial Scale

What does a baby elephant weigh? How much impact force does a jump have? Answer these questions and more by building your very own IoT industrial scale using the SparkFun OpenScale.

IoT Weight Logging Scale

This tutorial will show you how to make a scale that logs your weight to a custom website on the Internet. The principles can be extrapolated to any type of data.

For more inspiration, check out the SparkFun IoT Beehive:

- The Internet of Bees: Adding Sensors to Monitor Hive Health

And stay up to date with the OpenScale by following it on GitHub:

- Internet of Bees GitHub Repository

Need even more? Check out this awesome article wheatstone bridges and load cell types. Can't get enough about how load cells work? Check out this article for more in depth information.